Work Order ID 71196

Thursday, June 23, 2011 12:36:10 PM

Item ID: D212-664-207 **Accept** **Setup Start**

Revision ID: ~~U/R~~ **Stop**

Item Name: Crosstube Low Standard Aft

Start Date: 6/23/2011 **Start Qty:** 1.00 **Cust Item ID:**

Required Date: 6/30/2011 **Req'd Qty:** 1.00 **Customer:**

Reference:

Approvals: **Process Plan:** CL **Date:** 11/06/23 **Tooling:** _____ **Date:** _____ **Run Start**

QC: _____ **Date:** _____ **SPC (Y/N):** _____ **Date:** _____ **Stop**

Sequence ID/ Work Center ID	Operation Description	Set Up/ Run Hours	Tool ID	Tool #	Plan Code	Accept Qty	Reject Qty	Reject Number	Insp. Stamp
Draw Nbr	**Revision Nbr**								
D212-664-247	Rev B U/~~R~~ OK								
100	DOCUMENT CONTROL	0.00							
DC	**Memo**	0.00							
Document Control	Photocopy bluefile and create labels as per PPP D212-664-207 CHG~~001~~ CHG002								
110	Pick Kit	0.00							
Packaging	Packaging								
Packaging	**Memo**	0.00							
120	BENDING MACHINE - CROSSTUBES	0.00							
CNC Bend 2	**Memo**	0.00							
CNC Alpha 160 Bender	Bend tube as per Dwg D212-664-247 using CNC bender program and Folio FT								

CN11-614 OK 11.06.23

11/10/07 for MLS 11-10-6

DP 11-9-30

DP 11-9-30

Dart Aerospace Ltd

W/O:		WORK ORDER CHANGES					
DATE	STEP	PROCEDURE CHANGE	By	Date	Qty	Approval Chief Eng / Prod Mgr	Approval QC Inspector

Part No: _____ **PAR #:** _____ **Fault Category:** _____ **NCR:** Yes No **DQA:** _____ **Date:** _____

Resolution: _____ **Disposition:** _____ **QA: N/C Closed:** _____ **Date:** _____

NCR:		WORK ORDER NON-CONFORMANCE (NCR)						
DATE	STEP	Description of NC Section A	Corrective Action Section B			Verification Section C	Approval Chief Eng	Approval QC Inspector
			Initial Chief Eng	Action Description Chief Eng	Sign & Date			

NOTE: Date & initial all entries

H:\FORMS\Quality Assurance\approved QA\NCRWO RevE

Work Order ID 71196

Thursday, June 23, 2011 12:36:10 PM

Item ID: D212-664-207
Revision ID: U/R
Item Name: Crosstube Low Standard Aft

Accept

Setup Start
Stop

Start Date: 6/23/2011 **Start Qty:** 1.00
Required Date: 6/30/2011 **Req'd Qty:** 1.00
Reference:

Cust Item ID:
Customer:

Run Start
Stop

Approvals: **Process Plan:** _____ **Date:** _____ **Tooling:** _____ **Date:** _____
QC: _____ **Date:** _____ **SPC (Y/N):** _____ **Date:** _____

Sequence ID/ Work Center ID	Operation Description	Set Up/ Run Hours	Tool ID	Tool #	Plan Code	Accept Qty	Reject Qty	Reject Number	Insp. Stamp
130	QC15- Crosstube Dimensional Check	0.00							
QC	Memo	0.00							
Quality Control									
140		0.00							
Crosstubes	Crosstubes								
Crosstubes	Memo	0.00							

1-Drill Rivet holes as per Dwg D212-664-247 using DT8972.***Use T-Pin***

2-Drill pilot holes in tube as per Dwg D212-664-247 using DT8550 and DT8551

3-Ream hole to finish size in tube as per Dwg D212-664-247

4-Deburr & Inspect for surface damage. Repair damage within limits as per Dwg D212-664-247

5-Scribe part # and batch # using vibrating stylus as per Dwg D212-664-247

Dart Aerospace Ltd

W/O:		WORK ORDER CHANGES					
DATE	STEP	PROCEDURE CHANGE	By	Date	Qty	Approval Chief Eng / Prod Mgr	Approval QC Inspector

Part No: _____ **PAR #:** _____ **Fault Category:** _____ **NCR:** Yes No **DQA:** _____ **Date:** _____

Resolution: _____ **Disposition:** _____ **QA: N/C Closed:** _____ **Date:** _____

NCR:		WORK ORDER NON-CONFORMANCE (NCR)						
DATE	STEP	Description of NC Section A	Corrective Action Section B			Verification Section C	Approval Chief Eng	Approval QC Inspector
			Initial Chief Eng	Action Description Chief Eng	Sign & Date			

NOTE: Date & initial all entries

Work Order ID 71196

Thursday, June 23, 2011 12:36:10 PM

Item ID: D212-664-207
Revision ID: U/R
Item Name: Crosstube Low Standard Aft

Accept

Setup Start
Stop

Start Date: 6/23/2011 **Start Qty:** 1.00
Required Date: 6/30/2011 **Req'd Qty:** 1.00
Reference:

Cust Item ID:
Customer:

Run Start
Stop

Approvals: **Process Plan:** _____ **Date:** _____ **Tooling:** _____ **Date:** _____
QC: _____ **Date:** _____ **SPC (Y/N):** _____ **Date:** _____

Sequence ID/ Work Center ID	Operation Description	Set Up/ Run Hours	Tool ID	Tool #	Plan Code	Accept Qty	Reject Qty	Reject Number	Insp. Stamp
150	Crosstubes Chemical Conversion	0.00							
HandFXtube	Memo	0.00	JW	11-10-03					
Hand Finishing Crosstubes	Chemical Conversion Coat Tube & Cuffs								
160	QC3- Inspect Part Finish	0.00							
QC	Memo	0.00					11	10	04 (1)
Quality Control									
170	QC5- Inspect part completeness to step on W/O	0.00							
QC	Memo	0.00					11	10	04 (1)
Quality Control									

Dart Aerospace Ltd

W/O:		WORK ORDER CHANGES					
DATE	STEP	PROCEDURE CHANGE	By	Date	Qty	Approval Chief Eng / Prod Mgr	Approval QC Inspector

Part No: _____ **PAR #:** _____ **Fault Category:** _____ **NCR:** Yes No **DQA:** _____ **Date:** _____

Resolution: _____ **Disposition:** _____ **QA: N/C Closed:** _____ **Date:** _____

NCR:		WORK ORDER NON-CONFORMANCE (NCR)						
DATE	STEP	Description of NC Section A	Corrective Action Section B			Verification Section C	Approval Chief Eng	Approval QC Inspector
			Initial Chief Eng	Action Description Chief Eng	Sign & Date			

NOTE: Date & initial all entries

H:\FORMS\Quality Assurance\approved QA\NCRWO RevE

Work Order ID 71196

Thursday, June 23, 2011 12:36:10 PM

Item ID: D212-664-207
Revision ID: U/R
Item Name: Crosstube Low Standard Aft

Accept

Setup Start
Stop

Start Date: 6/23/2011 **Start Qty:** 1.00
Required Date: 6/30/2011 **Req'd Qty:** 1.00
Reference:

Cust Item ID:
Customer:

Run Start
Stop

Approvals: **Process Plan:** _____ **Date:** _____ **Tooling:** _____ **Date:** _____
QC: _____ **Date:** _____ **SPC (Y/N):** _____ **Date:** _____

Sequence ID/ Work Center ID	Operation Description	Set Up/ Run Hours	Tool ID	Tool #	Plan Code	Accept Qty	Reject Qty	Reject Number	Insp. Stamp
180	Outsource process - NDT per QSI038 4.1	0.00							
Outsource2	**Memo**	0.00					11-10-6		
Outsource process - NDT	Liquid Penetrant Inspection as per QSI 038 Issue P/O: 15101 LPI as per ASTM 1417 Level 2 Attach copy of NDT results to work order							1	
190	Receive & Inspect for Damage & Mat'l Certs Packaging	0.00					11/10/6	(1)	
Packaging	**Memo**	0.00							
Packaging	Ensure copy of NDT results attached to work order.								
200	QC5- Inspect part completeness to step on W/O	0.00					11 10 06	(1)	
QC	**Memo**	0.00							
Quality Control	Inspect for damage & ensure results are as per Dwg D212-664-207								

Dart Aerospace Ltd

W/O:		WORK ORDER CHANGES					
DATE	STEP	PROCEDURE CHANGE	By	Date	Qty	Approval Chief Eng / Prod Mgr	Approval QC Inspector

Part No: _____ **PAR #:** _____ **Fault Category:** _____ **NCR:** Yes No **DQA:** _____ **Date:** _____

Resolution: _____ **Disposition:** _____ **QA: N/C Closed:** _____ **Date:** _____

NCR:		WORK ORDER NON-CONFORMANCE (NCR)						
DATE	STEP	Description of NC Section A	Corrective Action Section B			Verification Section C	Approval Chief Eng	Approval QC Inspector
			Initial Chief Eng	Action Description Chief Eng	Sign & Date			

NOTE: Date & initial all entries

Work Order ID 71196

Thursday, June 23, 2011 12:36:10 PM

Item ID: D212-664-207
Revision ID: U/R
Item Name: Crosstube Low Standard Aft

Accept

Setup Start
Stop

Start Date: 6/23/2011 **Start Qty:** 1.00
Required Date: 6/30/2011 **Req'd Qty:** 1.00
Reference:

Cust Item ID:
Customer:

Run Start
Stop

Approvals: **Process Plan:** _____ **Date:** _____ **Tooling:** _____ **Date:** _____
QC: _____ **Date:** _____ **SPC (Y/N):** _____ **Date:** _____

Sequence ID/ Work Center ID	Operation Description	Set Up/ Run Hours	Tool ID	Tool #	Plan Code	Accept Qty	Reject Qty	Reject Number	Insp. Stamp
210		0.00							
Crosstubes	Crosstubes					M	11	18	05 (1)
Crosstubes	**Memo**	0.00							
	1-Rivet and assemble Cuffs with T-Pin in the through bolt holes as per Dwg D212-664-247. with Sika flex in Between tube & Cuff								
	A/R SIKAFLEX -241/-291 BATCH: [redacted] 118393								
215	QC5- Inspect part completeness to step on W/O	0.00							
QC	**Memo**	0.00							
Quality Control	***Inspect cuff with T-Pin***								

11-10-05 (1)

Dart Aerospace Ltd

W/O:		WORK ORDER CHANGES					
DATE	STEP	PROCEDURE CHANGE	By	Date	Qty	Approval Chief Eng / Prod Mgr	Approval QC Inspector

Part No: _____ PAR #: _____ Fault Category: _____ NCR: Yes No DQA: _____ Date: _____

Resolution: _____ Disposition: _____ QA: N/C Closed: _____ Date: _____

NCR:		WORK ORDER NON-CONFORMANCE (NCR)						
DATE	STEP	Description of NC Section A	Corrective Action Section B			Verification Section C	Approval Chief Eng	Approval QC Inspector
			Initial Chief Eng	Action Description Chief Eng	Sign & Date			

NOTE: Date & initial all entries

H:\fFORMS\Quality Assurance\approved QA\NCRWO RevE

Work Order ID 71196

Thursday, June 23, 2011 12:36:10 PM

Item ID: D212-664-207 **Accept**

Revision ID: U/R

Item Name: Crosstube Low Standard Aft

Setup **Start**

Stop

Start Date: 6/23/2011 **Start Qty:** 1.00

Required Date: 6/30/2011 **Req'd Qty:** 1.00

Cust Item ID:

Customer:

Reference:

Run **Start**

Stop

Approvals: **Process Plan:** ____________ **Date:** __________ **Tooling:** __________ **Date:** __________

QC: ____________________ **Date:** __________ **SPC (Y/N):** __________ **Date:** __________

Sequence ID/ Work Center ID	**Operation Description**	**Set Up/ Run Hours**	**Tool ID**	**Tool #**	**Plan Code**	**Accept Qty**	**Reject Qty**	**Reject Number**	**Insp. Stamp**
220 SprayPaint Spray Painting	Spray Painting per QSI005 4.2 SprayPaint	0.00					11	10	05 ①
	Memo 1-Prime inside and outside crosstube as per QSI 005 4.2 2-Paint outside crosstube with White Imron as per QSI 005 4.2 PRIME: Start Time: 10:00 Fininsh Time: 11:00 PAINT: Start Time: 3:00 Finish Time: 4:30	0.00							
230 QC Quality Control	QC14- Inspect Spray Paint	0.00						11-10-06	
	Memo Wrap in plastic bag to protect from scratches	0.00							

Dart Aerospace Ltd

W/O:		WORK ORDER CHANGES					
DATE	STEP	PROCEDURE CHANGE	By	Date	Qty	Approval Chief Eng / Prod Mgr	Approval QC Inspector

Part No: _____ **PAR #:** _____ **Fault Category:** _____ **NCR:** Yes No **DQA:** _____ **Date:** _____

Resolution: _____ **Disposition:** _____ **QA: N/C Closed:** _____ **Date:** _____

NCR:		WORK ORDER NON-CONFORMANCE (NCR)						
DATE	STEP	Description of NC Section A	Corrective Action Section B			Verification Section C	Approval Chief Eng	Approval QC Inspector
			Initial Chief Eng	Action Description Chief Eng	Sign & Date			

NOTE: Date & initial all entries

H:\fFORMS\Quality Assurance\approved QA\NCRWO RevE

Work Order ID 71196

Thursday, June 23, 2011 12:36:10 PM

Item ID: D212-664-207
Revision ID: U/R
Item Name: Crosstube Low Standard Aft

Accept

Setup Start
Stop

Start Date: 6/23/2011 **Start Qty:** 1.00
Required Date: 6/30/2011 **Req'd Qty:** 1.00
Reference:

Cust Item ID:
Customer:

Run Start
Stop

Approvals: **Process Plan:** _____ **Date:** _____ **Tooling:** _____ **Date:** _____
QC: _____ **Date:** _____ **SPC (Y/N):** _____ **Date:** _____

Sequence ID/ Work Center ID	Operation Description	Set Up/ Run Hours	Tool ID	Tool #	Plan Code	Accept Qty	Reject Qty	Reject Number	Insp. Stamp
240	Crosstubes	0.00				M	11	10	06 (1)
Crosstubes	**Memo**	0.00							
Crosstubes	1- Assemble as per Dwg D212-664-247 2- Lightly scuff the bonded area using a 320 grit sand paper and clean the area with 41058 wash 'n' wipe 3- Instal support with magnobond 6398 per dwg D212-664-247, cure for 12hrs before packaging. Time & date of application: 11:30 AM Batch: 118234 EXP. DATE 11/11 Torque: 11/10/07 (1)								
250	QC5- Inspect part completeness to step on W/O	0.00							
QC	**Memo**	0.00							
Quality Control									

USE PROSEAL
SEE ATTACHED

5 11/10/07

Dart Aerospace Ltd

W/O:		WORK ORDER CHANGES					
DATE	STEP	PROCEDURE CHANGE	By	Date	Qty	Approval Chief Eng / Prod Mgr	Approval QC Inspector

Part No: _____ **PAR #:** _____ **Fault Category:** _____ **NCR:** Yes No **DQA:** _____ **Date:** _____

Resolution: _____ **Disposition:** _____ **QA: N/C Closed:** _____ **Date:** _____

NCR:		WORK ORDER NON-CONFORMANCE (NCR)						
DATE	STEP	Description of NC Section A	Corrective Action Section B			Verification Section C	Approval Chief Eng	Approval QC Inspector
			Initial Chief Eng	Action Description Chief Eng	Sign & Date			

NOTE: Date & initial all entries

-H:\fFORMS\Quality Assurance\approved QA\NCRWO RevE

Dart Aerospace Ltd

W/O: 71196		WORK ORDER CHANGES					
DATE	STEP	PROCEDURE CHANGE	By	Date	Qty	Approval Chief Eng / Prod Mgr	Approval QC Inspector
11.06.23	240	BOND SUPPORTS USING PROSEAL PER ATTACHED PROCEDURE (EMAIL)	NM	11 10 06	1	11.06.23 OST 642	21/10/06

Part No: D212-664-207 PAR #: _____ Fault Category: _____ NCR: Yes No DQA: _____ Date: _____

Resolution: _____ Disposition: _____ QA: N/C Closed: _____ Date: _____

NCR:		WORK ORDER NON-CONFORMANCE (NCR)						
DATE	STEP	Description of NC Section A	Corrective Action Section B			Verification Section C	Approval Chief Eng	Approval QC Inspector
			Initial Chief Eng	Action Description Chief Eng	Sign & Date			

NOTE: Date & initial all entries

H:\fFORMS\Quality Assurance\approved QA\NCRWO RevE

Chris Provencal

From: David Shepherd <dshepherd@dartaero.com>
Sent: Wednesday, June 15, 2011 3:05 PM
To: 'Chris Provencal'
Cc: 'Mike Petsche'; 'Dan Stow'; 'Eric Downing'; 'Linda Lacelle'
Subject: RE: Procedure for installing supports.

Follow Up Flag: Follow up
Flag Status: Flagged

Hi Chris,

I agree with your procedure outlined below. It is our preference to leave the paint on the crosstube if we can for added corrosion protection (and for ease of manufacture). If Dan's final testing shows there is a big difference between a painted/unpainted crosstube, then we will switch to alodine only on the crosstube.

David

From: Chris Provencal [mailto:cprovencal@dartaero.com]
Sent: Wednesday, June 15, 2011 11:24 AM
To: 'David Shepherd'
Cc: 'Mike Petsche'; 'Dan Stow'; 'Eric Downing'
Subject: RE: Procedure for installing supports.

David,

Can I confirm that this is the agreed procedure for all newly manufactured tubes with off-center supports:

- Scuff paint under support, clean with MEK
- Completely remove any finish on support (if present), scuff bottom surface of support, clean with MEK
- Apply a 0.04" – 0.07" layer of Proseal 890 class B-2 on bottom of support and install wet.
- Install clamps and torque per dwg
- Clean up excess proseal
- Let cure for 72 hours after installation, recheck torque.

Chris

From: David Shepherd [mailto:dshepherd@dartaero.com]
Sent: Tuesday, June 14, 2011 10:59 AM
To: 'Chris Provencal'
Cc: 'Mike Petsche'; 'Dan Stow'; 'Eric Downing'
Subject: RE: Procedure for installing supports.

Made a couple of small changes.

- Remove finish on xtube in area of support down to alodine finish.
- Touch up alodine on xtube in affected area
- Completely remove any finish on support, scuff bottom surface of support
- Apply a 0.04" – 0.07" layer of Proseal 890 class B-2 on bottom of support and install wet.
- Install clamps and torque per dwg

Work Order ID 71196

Thursday, June 23, 2011 12:36:10 PM

Item ID: D212-664-207
Revision ID: U/R
Item Name: Crosstube Low Standard Aft

Accept

Setup Start
Stop

Start Date: 6/23/2011 **Start Qty:** 1.00
Required Date: 6/30/2011 **Req'd Qty:** 1.00
Reference:

Cust Item ID:
Customer:

Run Start
Stop

Approvals: **Process Plan:** _____ **Date:** _____ **Tooling:** _____ **Date:** _____
QC: _____ **Date:** _____ **SPC (Y/N):** _____ **Date:** _____

Sequence ID/ Work Center ID	Operation Description	Set Up/ Run Hours	Tool ID	Tool #	Plan Code	Accept Qty	Reject Qty	Reject Number	Insp. Stamp
255	Pick Kit	0.00				11/10/6 SP			
Packaging	Memo	0.00							
Packaging									
260	QC4- 100% Inspect kits for completeness	0.00							
QC	Memo	0.00				11/10/07 (1)			
Quality Control									
270	Packaging	0.00							
Packaging	Memo	0.00				SP 11-10-7			
Packaging	Identify and pack for shipping as per PPP D212-664-207 Rev A								

B71196 D212-664-207

Dart Aerospace Ltd

W/O:		WORK ORDER CHANGES					
DATE	STEP	PROCEDURE CHANGE	By	Date	Qty	Approval Chief Eng / Prod Mgr	Approval QC Inspector

Part No: _____ **PAR #:** _____ **Fault Category:** _____ **NCR:** Yes No **DQA:** _____ **Date:** _____

Resolution: _____ **Disposition:** _____ **QA: N/C Closed:** _____ **Date:** _____

NCR:		WORK ORDER NON-CONFORMANCE (NCR)						
DATE	STEP	Description of NC Section A	Corrective Action Section B			Verification Section C	Approval Chief Eng	Approval QC Inspector
			Initial Chief Eng	Action Description Chief Eng	Sign & Date			

NOTE: Date & initial all entries

Work Order ID 71196

Thursday, June 23, 2011 12:36:10 PM

Item ID: D212-664-207
Revision ID: U/R
Item Name: Crosstube Low Standard Aft

Accept

Setup Start
Stop

Start Date: 6/23/2011 **Start Qty:** 1.00
Required Date: 6/30/2011 **Req'd Qty:** 1.00
Reference:

Cust Item ID:
Customer:

Run Start
Stop

Approvals: **Process Plan:** _____ **Date:** _____ **Tooling:** _____ **Date:** _____
QC: _____ **Date:** _____ **SPC (Y/N):** _____ **Date:** _____

Sequence ID/ Work Center ID	Operation Description	Set Up/ Run Hours	Tool ID	Tool #	Plan Code	Accept Qty	Reject Qty	Reject Number	Insp. Stamp
280	QC21- Final Inspection - Work Order Release	0.00					11/10/7		
QC Quality Control	**Memo**	0.00							

11-10-07

Dart Aerospace Ltd

W/O:		WORK ORDER CHANGES					
DATE	STEP	PROCEDURE CHANGE	By	Date	Qty	Approval Chief Eng / Prod Mgr	Approval QC Inspector

Part No: _____ **PAR #:** _____ **Fault Category:** _____ **NCR:** Yes No **DQA:** _____ **Date:** _____

Resolution: _____ **Disposition:** _____ **QA: N/C Closed:** _____ **Date:** _____

NCR:		WORK ORDER NON-CONFORMANCE (NCR)						
DATE	STEP	Description of NC Section A	Corrective Action Section B			Verification Section C	Approval Chief Eng	Approval QC Inspector
			Initial Chief Eng	Action Description Chief Eng	Sign & Date			

NOTE: Date & initial all entries

H:\fFORMS\Quality Assurance\approved QA\NCRWO RevE

Picklist Print

Thursday, June 23, 2011 12:36:08 PM

Work Order ID: 71196

Parent Item: D212-664-207

Parent Item Name: Crosstube Low Standard Aft

Start Date: 6/23/2011 **Required Date:** 6/30/2011

Start Qty: 1.00 **Required Qty:** 1.00

Comments:
IPP Rev:A - New Issue 07.09.12 EC verified by: JLM
IPP Rev:B ECN 1100p 08-01-11 DD verified by: EC
IPP Rev:C ECN 1121 08-02-25 DD verified by:eC
IPP Rev: D QC5 replaced by QC15 at step 5 KJ Verified by: ec

Component Item ID/ Item Name	Replacement Item ID	Mfg/ Purch	Bin Item	Primary Location	Last Location	Route Seq ID	Unit of Measure	Qty on Hand	Qty per Kit	Total Qty	Qty Issued	Date Issued	Status
D212-664-207TRNRevA		Manufactured	No	B708803		110	Each	0.0000	1	1	11-9-30		
Crosstube Turning Detail													
D3660-1		Manufactured	No			140	Each	13.0000	2	2	SAD 11-10-03		
CUFF													
				Location		**Loc Qty**		**Loc Code**					
				ST477		13							
					53501	1							
					62225	10							
					67782	2				2			
CR3212-4-06		Purchased	No			220	Each	906.0000	44	44	11.10.05		
CHERRY RIVET													
				Location		**Loc Qty**		**Loc Code**					
				ST311		906							
					112492	106							
					112794	800							

Dart Aerospace Ltd

W/O:		WORK ORDER CHANGES					
DATE	STEP	PROCEDURE CHANGE	By	Date	Qty	Approval Chief Eng / Prod Mgr	Approval QC Inspector

Part No: _____ **PAR #:** _____ **Fault Category:** _____ **NCR:** Yes No **DQA:** _____ **Date:** _____

Resolution: _____ **Disposition:** _____ **QA: N/C Closed:** _____ **Date:** _____

NCR:		WORK ORDER NON-CONFORMANCE (NCR)						
DATE	STEP	Description of NC Section A	Corrective Action Section B			Verification Section C	Approval Chief Eng	Approval QC Inspector
			Initial Chief Eng	Action Description Chief Eng	Sign & Date			

NOTE: Date & initial all entries

Picklist Print

Thursday, June 23, 2011 12:36:08 PM

Work Order ID: 71196

Parent Item: D212-664-207

Parent Item Name: Crosstube Low Standard Aft

Start Date: 6/23/2011 **Required Date:** 6/30/2011

Start Qty: 1.00 **Required Qty:** 1.00

D3595-063-530	Manufactured	No	240	Each	82.0000	4	4	m 11·10·06
RUBBER CUSHION								

Location	Loc Qty	Loc Code
LG	56	
70067	56	
LG055	26	
63407	6	
67185	20	

D2940-1	Manufactured	No	240	Each	17.0000	2	2	m 11·10·06
Support								

B# 72587 x1 71308 x1

Location	Loc Qty	Loc Code
LG	17	
70737	17	

MS21920-28	Purchased	No	240	Each	55.0000	4	4	m 11/10/06
Clamp(per MIL-DTL-8783C)								

Location	Loc Qty	Loc Code
FG	5	
105884	5	
LG050	50	
116839	2	
117344	5	
117998	43	

B# 118713

D3428-1	Manufactured	No	255	Each	10.0000	1	1	BZ2048 11/12/06
Placard								

Location	Loc Qty	Loc Code
ST053	10	
68920	10	

Dart Aerospace Ltd

W/O:		WORK ORDER CHANGES					
DATE	STEP	PROCEDURE CHANGE	By	Date	Qty	Approval Chief Eng / Prod Mgr	Approval QC Inspector

Part No: _____ **PAR #:** _____ **Fault Category:** _____ **NCR:** Yes No **DQA:** _____ **Date:** _____

Resolution: _____ **Disposition:** _____ **QA: N/C Closed:** _____ **Date:** _____

NCR:		WORK ORDER NON-CONFORMANCE (NCR)						
DATE	STEP	Description of NC Section A	Corrective Action Section B			Verification Section C	Approval Chief Eng	Approval QC Inspector
			Initial Chief Eng	Action Description Chief Eng	Sign & Date			

NOTE: Date & initial all entries

Picklist Print

Thursday, June 23, 2011 12:36:08 PM

Work Order ID: 71196

Parent Item: D212-664-207

Parent Item Name: Crosstube Low Standard Aft

Start Date: 6/23/2011 **Required Date:** 6/30/2011

Start Qty: 1.00 **Required Qty:** 1.00

MS21042L6	Purchased	No	255	Each	359.0000	6	6	
Nut								

Location		Loc Qty	Loc Code
ST300		359	
	117343	59	
	117677	200	6
	118078	100	

AN960JD616 NAS1149D0663J	Purchased	No	255	Each	0.0000	18	18	
Washer								
AN6-40A	Purchased	No	255	Each	96.0000	4	4	
Bolt								

Location		Loc Qty	Loc Code
ST340		46	
	117366	46	
ST343		50	
	117688	50	4

AN6-41A	Purchased	No	255	Each	48.0000	2	2	
Bolt								

Location		Loc Qty	Loc Code
ST344		48	
	117366	48	2

Dart Aerospace Ltd

W/O:		WORK ORDER CHANGES					
DATE	STEP	PROCEDURE CHANGE	By	Date	Qty	Approval Chief Eng / Prod Mgr	Approval QC Inspector

Part No: _____ **PAR #:** _____ **Fault Category:** _____ **NCR:** Yes No **DQA:** _____ **Date:** _____

Resolution: _____ **Disposition:** _____ **QA: N/C Closed:** _____ **Date:** _____

NCR:		WORK ORDER NON-CONFORMANCE (NCR)						
DATE	STEP	Description of NC Section A	Corrective Action Section B			Verification Section C	Approval Chief Eng	Approval QC Inspector
			Initial Chief Eng	Action Description Chief Eng	Sign & Date			

NOTE: Date & initial all entries

DART AEROSPACE LTD	Work Order:	71196
Description: Crosstube Low Aft (205/212)	**Part Number:**	**D212-664-207**
Inspection Dwg: D212-664-247 **Rev:** B		**Page 1 of 1**

Required Dimension	Min	Max
Height	18.16	18.42
1/2 Span	48.55	48.81
Angle	49	52
Total Span	97.1	97.62

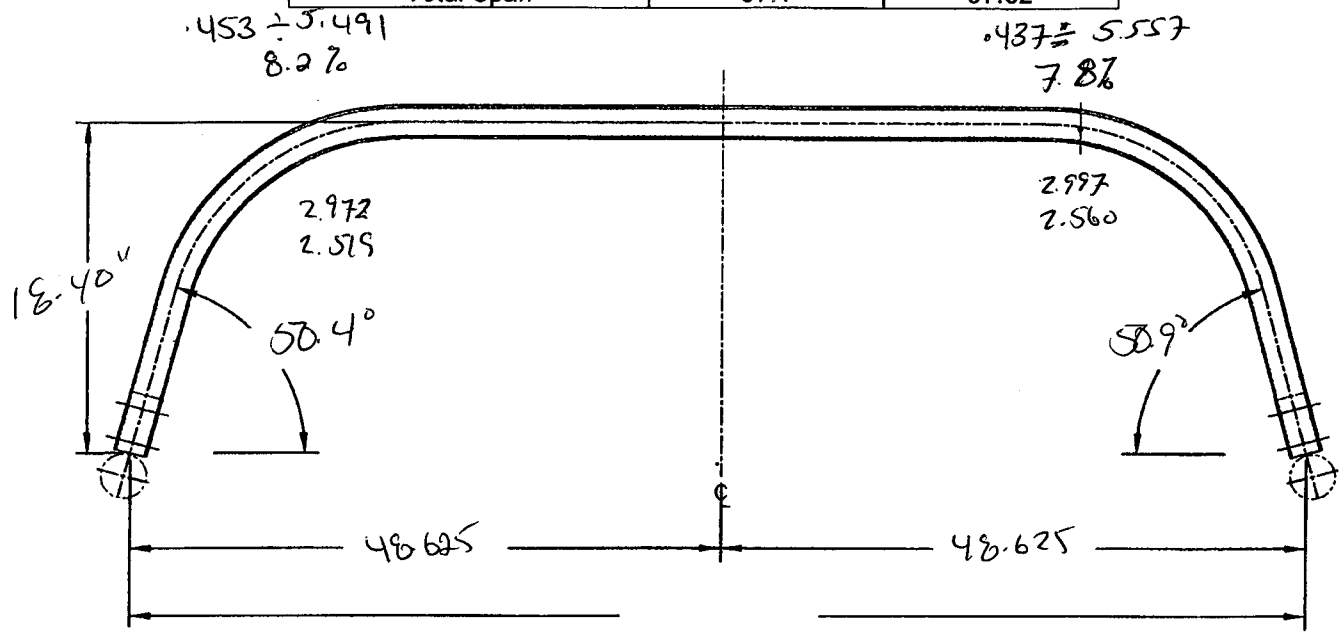

Comments
Side A = 8.2 % crushing @ 28 passes
Side B = 7.8% crushing @ 25 passes
Both measured @ nut (ED)

QC15 Inspection	
Date	11/09/30

Rev	Date	Change	Revised by	Approved
A	08.02.29	New Issue	KJ/JM	
B	10.04.01	Dwg Rev updated	KJ	

D212-664-207 71196 ECN 11-614

B

Item	Qty -247	Qty -247B	Part Number	Description
1	X		D212-664-247	CROSSTUBE ASSEMBLY (205/212 LOW AFT)
2		X	D212-664-247B	CROSSTUBE ASSEMBLY (214 LOW AFT)
3	1	1	D6008-132	CROSSTUBE
4	2	2	D2940-1	SUPPORT
5	4	4	D3595-063-530	RUBBER CUSHION
6	2	2	D3660-1	CUFF
7	4	4	MS21920-28	CLAMP (OR MS21920-30)
8	44	44	CR3212-4-06	RIVET (OR M7885/3-4-06)
9	A/R	A/R	MAGNOBOND 6398	ROCKWELL SPECIFICATION RBO-120-023 ADHESIVE (TEXTRON/BELL SPEC. 299-947-100, TYPE II, CLASS 2 ADHESIVE)
10	A/R	A/R	SIKAFLEX-241/-291	SEALANT (OR PROSEAL 890 OR MIL-S-8802 CLASS B2 SEALANT)

GENERAL NOTES:

1) MATERIAL: MANUFACTURED FROM D6008-132
   FINISHED LENGTH = 128.268±0.020 (BEFORE BENDING/TRIMMING)
2) FINISH: CHEMICAL CONVERSION COAT PER DART QSI 005 4.1
   PRIME INSIDE AND OUTSIDE PER DART QSI 005 4.2
   PAINT OUTSIDE PER DART QSI 005 4.2
3) TOLERANCES ARE PER DART QSI 018 UNLESS OTHERWISE NOTED.
4) UNITS: INCHES UNLESS OTHERWISE NOTED.
5) BREAK SHARP EDGES: 0.005 TO 0.010 MAX.
6) IDENTIFICATION: SCRIBE DART PART NUMBER "D212-664-XXX" AND BATCH NUMBER ON INSIDE OF CUFF USING VIBRATING STYLUS.
7) WEIGHT: D212-664-247 = 36.6 lbs (PER IIN-D212-664)
   D212-664-247B = 36.6 lbs (PER IIN-D212-664)
8) PART IS SYMMETRIC ABOUT CENTERLINE.
9) WHEN MACHINING TAPER, RUN CUTTER OFF PART. BLEND OUT EDGE LONGITUDINALY, TRANSITION SHOULD BE SMOOTH.
10) BEND PROGRESSIVELY WITH A MINIMUM OF 8 PASSES. MAXIMUM TUBE FLATTENING DUE TO BENDING IS 6% BASED ON O.D., EXCEPT UP TO 10% IS ALLOWED IN AREA NOTED.
11) LIQUID PENETRANT INSPECT OUTSIDE SURFACE OF CROSSTUBE PER QSI 038.
12) INSTALL D2940-1 SUPPORT USING 0.03" TO 0.06" THICK LAYER OF MAGNOBOND 6398 TO THE SURFACE OF D2940-1 THAT WILL BE IN CONTACT WITH THE CROSSTUBE PER QSI 015. LET CURE FOR 12 HOURS AFTER INSTALLATION AND PRIOR TO PACKAGING.
13) INSTALL MS21920-28 CLAMPS (OR -30) WITH D3595-063-530 RUBBER CUSHIONS TO SECURE THE D2940-1 SUPPORT ON TOP SIDE OF THE CROSSTUBE. ENSURE CLAMPS ARE OPPOSITE OF CROSSTUBE SUPPORT.
14) EXTREME CARE MUST BE TAKEN TO PROTECT THE OUTSIDE SURFACE OF THE TUBE. THE OUTSIDE SURFACE MUST BE SMOOTH AND FREE FROM SURFACE DEFECTS SUCH AS SCRATCHES, NICKS, OR DENTS. DEFECTS UP TO 0.005" MAY BE BLENDED OUT LONGITUDINALLY. CIRCUMFERENTIAL GRIND MARKS ARE UNACCEPTABLE.
15) TORQUE CLAMPS 80 TO 100 IN-LB. ENSURE AT LEAST 1.5 THREADS SHOWING IN SAFETY AND THAT NUT HAS NOT BOTTOMED-OUT AFTER TORQUING.
16) INSTALL D3660-1 CUFF AFTER CHEMICAL CONVERSION COAT BUT BEFORE PAINT, WITH A LAYER OF SIKAFLEX-241/-291 OR PROSEAL 890 OR MIL-S-8802 CLASS B2 SEALANT BETWEEN CUFF AND CROSSTUBE. SEAL EDGE OF CUFF TO ENSURE NO GAPS.
17) TOUCH-UP HOLES WITH CHEMICAL CONVERSION COAT.

DEO ATTACHED

ECN# 11-614
11.07.28

UNDER REVIEW
11.06.13

RELEASED
2009 -10- 29

REV.	DESCRIPTION	BY	DATE
B	REVISE GENERAL NOTES/PART LIST; UPDATE TO CURRENT STANDARDS; ADD -247B (ZN C4-2, D5-2)	RF	09.09.30
A	NEW ISSUE	CP	07.07.07

DESIGN		DART AEROSPACE LTD HAWKESBURY, ONTARIO, CANADA
DRAWN	RF	
CHECKED		DRAWING NO. REV. B
MFG. APPR.		D212-664-247 SHEET 1 OF 4
APPROVED		TITLE SCALE
DE APPR.		CROSSTUBE (205/212 LOW AFT) NTS
DATE	09.09.30	

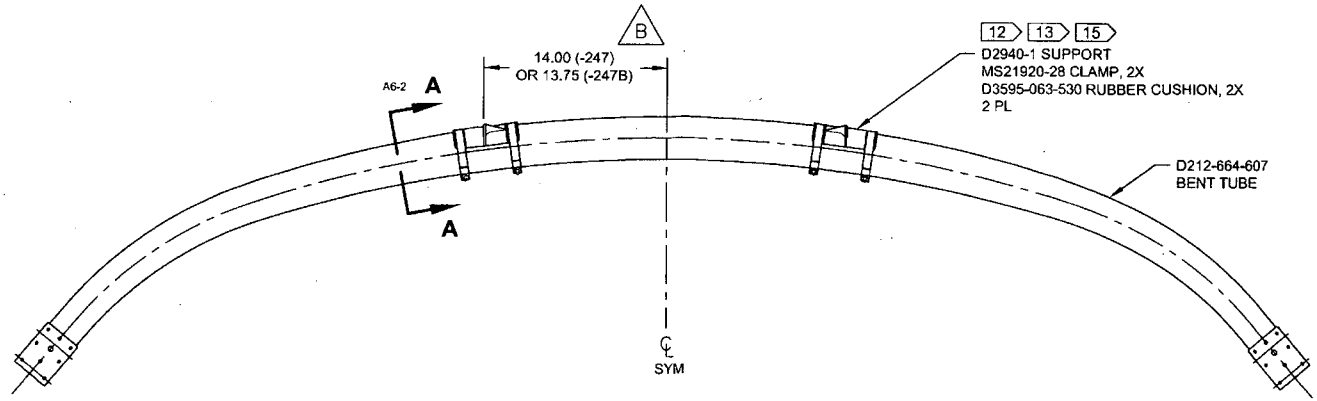

D212-664-247/-247B
ASSEMBLY DETAIL B

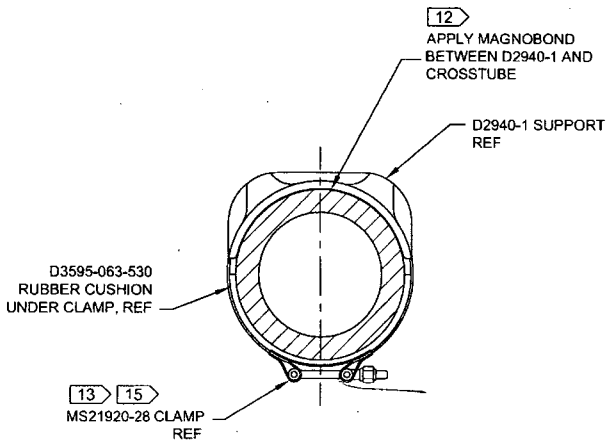

SECTION A-A D6-2
SCALE 4X

DEO ATTACHED

DCN # 11.614
11.07.28

UNDER REVIEW
11.04.13

RELEASED
2009 -10- 29

DESIGN		**DART AEROSPACE LTD** HAWKESBURY, ONTARIO, CANADA	
DRAWN	RF		
CHECKED		DRAWING NO.	REV. B
MFG. APPR.		D212-664-247	SHEET 2 OF 4
APPROVED		TITLE	SCALE
DE APPR.		CROSSTUBE (205/212 LOW AFT)	NTS
DATE	09.09.30		

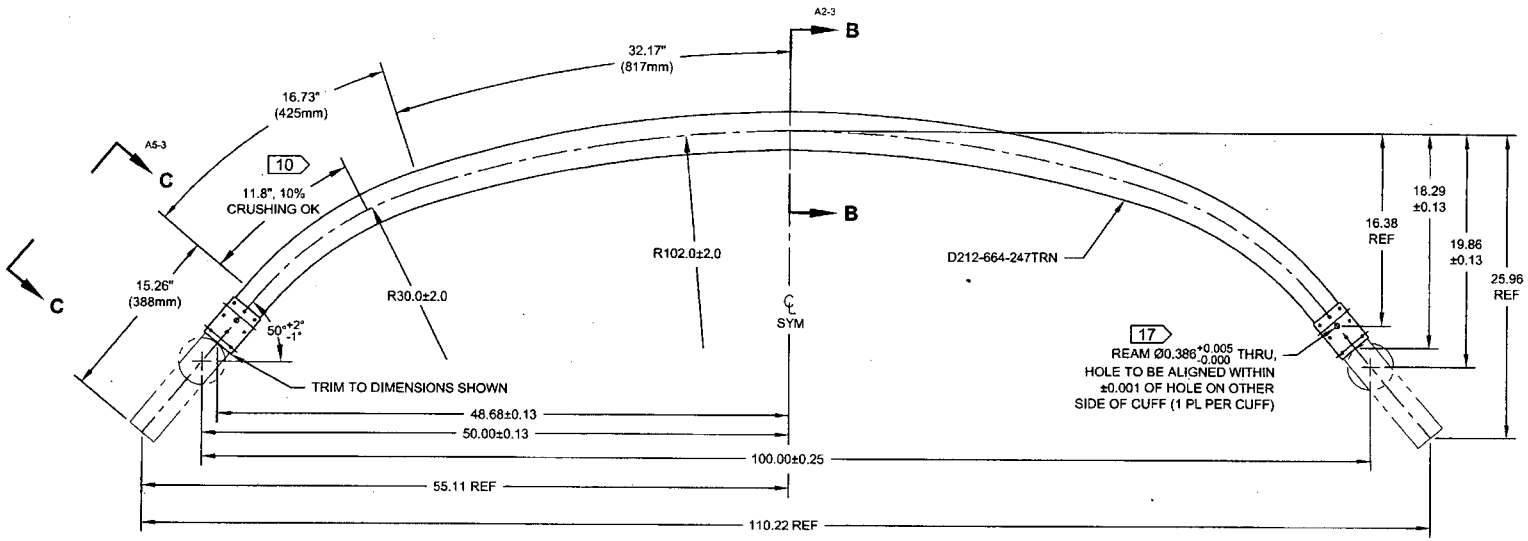

D212-664-607
BENDING AND DRILLING DETAIL 10 B

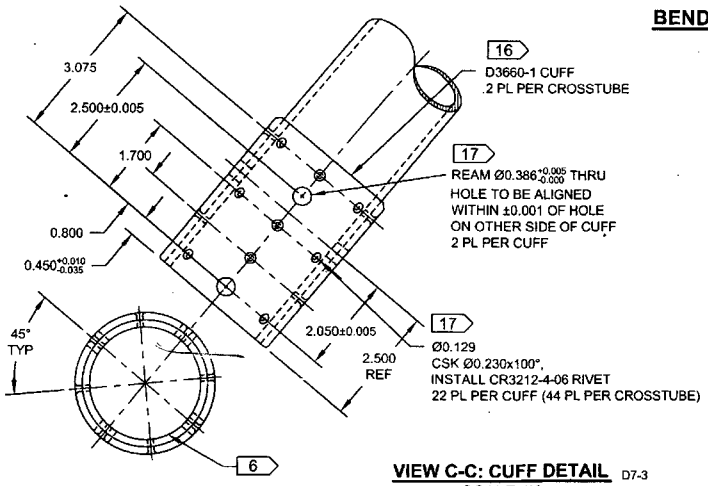

VIEW C-C: CUFF DETAIL D7-3
SCALE 4X

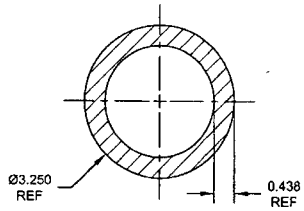

SECTION B-B D4-3
SCALE 4X

DEO ATTACHED

UNDER REVIEW
11.06.13

RELEASED
2009 -10- 29

DESIGN		DART AEROSPACE LTD HAWKESBURY, ONTARIO, CANADA
DRAWN	RF	
CHECKED		DRAWING NO. REV. B
MFG. APPR.		D212-664-247 SHEET 3 OF 4
APPROVED		TITLE SCALE
DE APPR.		CROSSTUBE (205/212 LOW AFT) NTS
DATE	09.09.30	

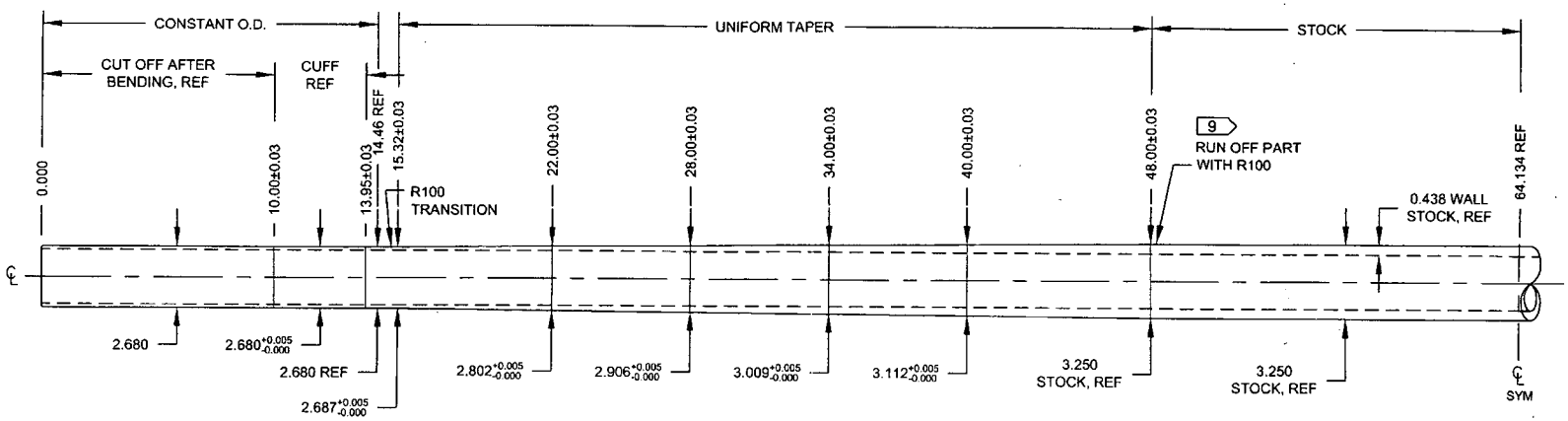

D212-664-247TRN
TURNING DETAIL

DEO ATTACHED
ECN #11.614
11.07.28

UNDER REVIEW
GP 11.08.13

RELEASED
2009 -10- 29

DESIGN	GP	**DART AEROSPACE LTD** HAWKESBURY, ONTARIO, CANADA
DRAWN	RF	
CHECKED	GP	DRAWING NO. D212-664-247 — REV. B — SHEET 4 OF 4
MFG. APPR.		
APPROVED		TITLE: CROSSTUBE (205/212 LOW AFT) — SCALE: NTS
DE APPR.		
DATE 09.09.30		

DRAWING NO.	TITLE	REV. B	DART AEROSPACE LTD ENGINEERING ORDER	D.E.O. NO.	SHEET NO.	SCALE
D212-664-247	CROSSTUBE ASS'Y (205 LOW AFT)			D212-664-247-B-1	SHEET 1 OF 1	NTS

DRAWN	CHECKED	MFG. APPR.	APPROVED	DE APPR.
DATE 11.07.15	DATE 11.07.20	DATE 11.07.21	DATE 11/07/21	DATE 11.07.21

PURPOSE:
REPLACE MAGNOBOND WITH PROSEAL.

CHANGE:

IS:

Item	Qty -247	Qty -247B	Part Number	Description
9	A/R	A/R	PROSEAL 890 B-2	SEALANT, AMS-S-8802 CLASS B-2

WAS:

9	A/R	A/R	MAGNOBOND 6398	ROCKWELL SPECIFICATION RBO-120-023 ADHESIVE (TEXTRON/BELL SPEC. 299-947-100, TYPE II, CLASS 2 ADHESIVE)

NOTE 12 & 15, SHEET 1 IS AMENDED AS FOLLOWS:

IS:

12) TO INSTALL D2940-1 SUPPORT: ABRADE MATING SURFACE OF SUPPORT AND CROSSTUBE WITH 180-GRIT SANDPAPER AND REMOVE RESIDUE WITH MEK (OR EQUIVALENT). APPLY A 0.04" TO 0.07" THICK LAYER OF PROSEAL 890 CLASS B-2 (OR AMS-S-8802 CLASS B-2) SEALANT TO MATING SURFACE OF SUPPORT.

15) TORQUE CLAMPS 80 TO 100 IN-LB. ENSURE AT LEAST 1.5 THREADS SHOWING IN SAFETY AND THAT NUT HAS NOT BOTTOMED-OUT AFTER TORQUING. **PRIOR TO PACKAGING, RE-CHECK TORQUE ON CLAMPS AFTER PROSEAL 890 SEALANT HAS CURED FOR 72 HOURS.**

WAS:

12) INSTALL D2940-1 SUPPORT USING 0.03" TO 0.06" THICK LAYER OF MAGNOBOND 6398 TO THE SURFACE OF D2940-1 THAT WILL BE IN CONTACT WITH THE CROSSTUBE PER QSI 015. LET CURE FOR 12 HOURS AFTER INSTALLATION AND PRIOR TO PACKAGING.

15) TORQUE CLAMPS 80 TO 100 IN-LB. ENSURE AT LEAST 1.5 THREADS SHOWING IN SAFETY AND THAT NUT HAS NOT BOTTOMED-OUT AFTER TORQUING.

RELEASED 2011-07-28

5.2 STANDARD GEAR CROSSTUBES

Item	-107	-207	-209	Part Number	Description
	X			**D212-664-107**	**CROSSTUBE INSTALLATION, 204/205/210/212/214/412, UH-1H, UH-1A/B/E/F/L/P, TH-1F/L, HH-1K STANDARD FWD**
		X		**D212-664-207**	**CROSSTUBE INSTALLATION, 204/205/210/212/214, UH-1H, UH-1A/B/E/F/L/P, TH-1F/L, HH-1K STANDARD AFT**
			X	**D412-664-209**	**CROSSTUBE INSTALLATION, 412 STANDARD AFT**
6	1			D212-664-147	CROSSTUBE ASSEMBLY, 204/205/210/212/214/412, UH-1H, UH-1A/B/E/F/L/P, TH-1F/L, HH-1K STANDARD FWD
7		1		D212-664-247	CROSSTUBE ASSEMBLY, 204/205/210/212/214, UH-1H, UH-1A/B/E/F/L/P, TH-1F/L, HH-1K STANDARD AFT
8			1	D412-664-249	CROSSTUBE ASSEMBLY, 412 STANDARD AFT
10	2			* D2893-1	SUPPORT
11	4			* D3595-063-450	RUBBER CUSHION
12	4			* MS21920-25	CLAMP (OR MS21042-26)
13	4			AN6-35A	BOLT
14	4			AN6-36A	BOLT
15	6			MS21042L6	NUT (OR MS21042-6)
16	18			AN960JD616	WASHER
20		2		* D2940-1	SUPPORT
21		4		* D3595-063-530	RUBBER CUSHION
22		4		* MS21920-28	CLAMP (OR MS21042-30)
23		4		AN6-40A	BOLT
24		2		AN6-41A	BOLT
25		6		MS21042L6	NUT (OR MS21042-6)
26		18		AN960JD616	WASHER
30			1	* D2896-1	SUPPORT
31			2	* D2856-600-1009	ABRASION STRIP
32			2	* D3595-063-570	RUBBER CUSHION
33			4	* MS21920-28	CLAMP
34			2	* MS21920-30	CLAMP (OR MS21042-32)
35			4	AN6-40A	BOLT
36			2	AN6-41A	BOLT
37			6	MS21042L6	NUT (OR MS21042-6)
38			18	AN960JD616	WASHER
39			2	* D3189-1	CHAFING SHIELD
45	2			* D3659-1	CUFF
46		2	2	* D3660-1	CUFF
47	44	44		* CR3212-4-06	RIVET (M7885/3-4-06)
48			44	* CR3212-4-07	RIVET (M7885/3-4-07)
50	1	1		D3428-1	PLACARD

*REFERENCE ONLY. PARTS ARE INCLUDED IN D212-664-147/-247 OR D412-664-249 ASSEMBLIES ABOVE
NOTE: KITS INCLUDE EXTRA HARDWARE FOR COMPATIBILITY WITH BOTH DART AND BELL/AA SKIDTUBES.

ACUREN

LIQUID PENETRANT TEST REPORT

P- 05630

PAGE 1 OF 1

CLIENT: DART AEROSPACE
ATTENTION: LINDA/CHANTALE/IAN/MATT
ADDRESS: 1270, ABERDEEN ST. HAWKESBURY, ON

DATE: OCT-05-2011 TIME: AM ☑ PM ☐
ACUREN JOB NO.: 188-11-02189
PO/WO NO.: 15701
WORK LOCATION: AS ADDRESS
ACCEPTANCE STD.: ASTM1417/03-038 REV./DATE: 2005

PROJECT: PT → WET FLUORESCENT LIQUID PENETRANT ON "4 CROSSTUBES", "7 SLEEVES", "9 STUDS"

ITEM(S) EXAMINED: — SEE BELOW —

JOB DESCRIPTION | PROCEDURE NO. LT-002 REV./DATE 2007 | TECHNIQUE NO. LT-002 REV./DATE 2007

PART NO.: | MATERIAL: ALODINE ALUMINUM/12-4PA 25 | THICKNESS: N/A

SCOPE: PERFORMED A WET FLUORESCENT LIQUID PENETRANT INSPECTION ON 100% OF THE EXTERNAL SURFACE ON ITEMS MENTIONED BELOW

TEST DETAILS

METHOD	☑ FLUORESCENT ☐ VISIBLE			☑ WATER WASH	☐ SOLVENT REMOVABLE ☐ POST EMULSIFIED
FAMILY BRAND	MAGNAFLUX			BLACK LIGHT S/N 13798	☑ OUTPUT > 1000 µ W/CM² ☐ AMBIENT < 2 fc
PENETRANT	ZL-67	MINIMUM DWELL TIME	10 MIN.	LIGHTING EQUIP.	☐ FLASHLIGHT ☐ TROUBLELIGHT ☐ OUTPUT>100 fc @ SURFACE
PENETRANT REMOVER	H_2O	MINIMUM DRY TIME	>10 MIN.	OTHER	
DEVELOPER	SKD-S2	MINIMUM DWELL TIME	10 MIN.	LIGHT METER S/N	CAL DUE DATE Nov-2011
DEVELOPER TYPE	☑ NON AQUEOUS ☐ AQUEOUS		☐ DRY		

TEST SURFACE

SURFACE CONDITION	☐ AS GROUND	☐ AS WELDED	☐ MACHINED	☐ SHOT BLASTED	☑ CLEAN BARE METAL
SURFACE TEMPERATURE	☐ < - 4°C/ 20°F	☐ - 4°C/ 20°F TO 10°C/50°F		☑ 10°C/50°F TO 52°C/125°F	☐ > 52°C/125°F

RESULTS- (☐ METRIC ☐ IMPERIAL)

1	CROSSTUBE W.O.ID 71108	✓	ITEM ID	D212-664-107	FWD
2	71109	✓		D212-664-107	FWD
3	71195	✓		D212-664-207	AFT
4	71196	✓		D212-664-207	AFT
5	SLEEVE (7) W.O.ID 72147	✓		D3689-1	
6	STUDS (6) W.O.ID 72045	✓		D3688-1	
7	STUDS (3) W.O.ID 72042	✓		D3688-5	

NO RELEVANT INDICATION WAS DETECTED AS PER APPLICABLE STANDARDS.

11.10.06

SIGNATURES

CLIENT REPRESENTATIVE: Matthew Murdoch (PRINT) — Matthew Murdoch (SIGNATURE) — DTR # E44758

TECHNICIAN (SIGNATURE): | REPORT REVIEWED BY:

NAME (PRINT): YVES DESROSIERS | NAME | INITIALS

1ST TECHNICIAN: CGSB LEVEL 2 SNT LEVEL 2 CGSB REG. NO 3049
2ND TECHNICIAN: CGSB LEVEL — SNT LEVEL — CGSB REG. NO —

WHITE – CLIENT COPY CANARY – OFFICE COPY PINK – TECHNICIAN COPY GOLD – OFFICE COPY